SWITCHlan CISCO configuration
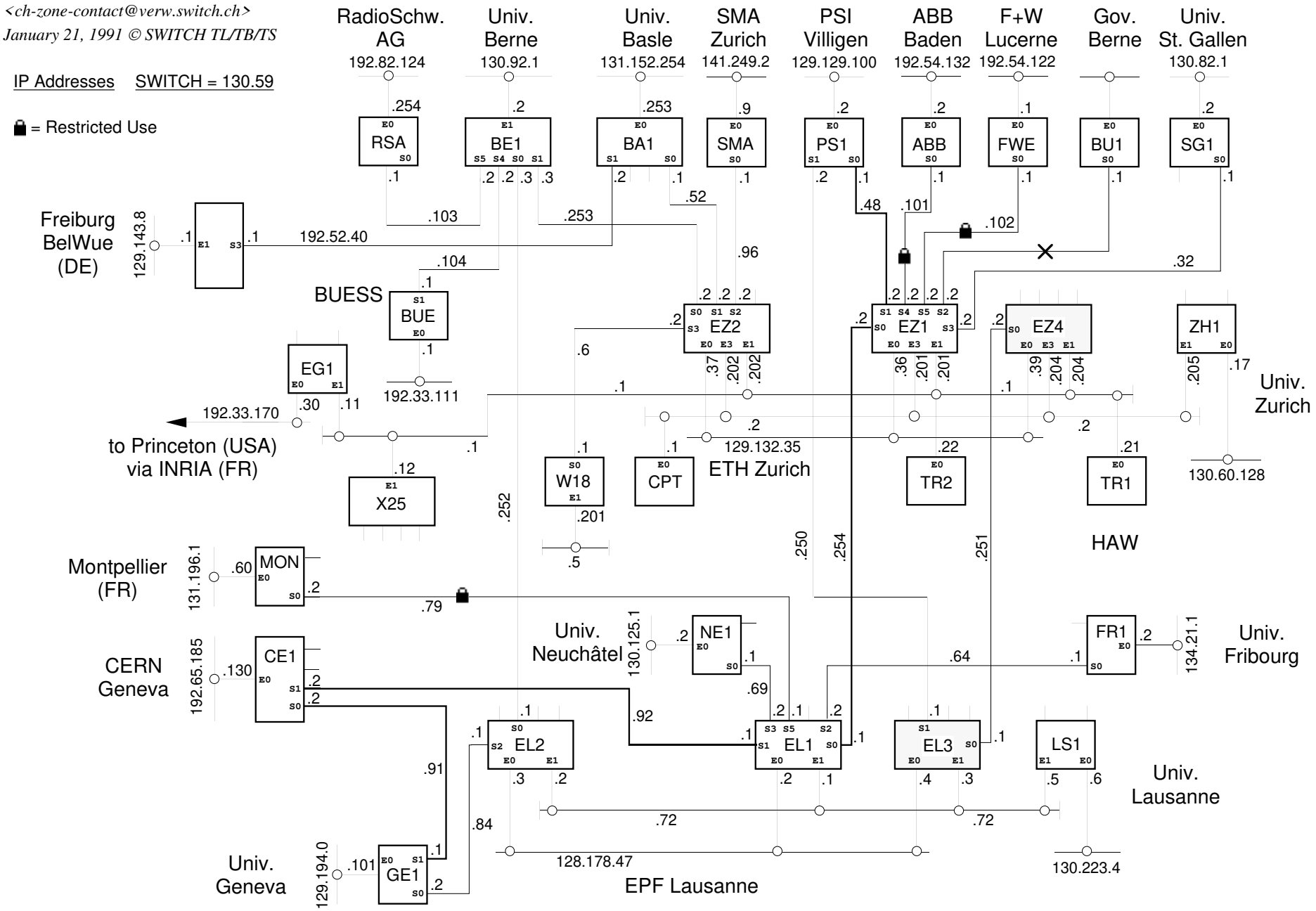
<ch-zone-contact@verw.switch.ch>
January 21, 1991 © SWITCH TL/TB/TS